Data Sheet

Optimux-4T1-Ethernet

Four-Channel T1 and Ethernet Multiplexer

Any Traffic Over Fiber

- Multiplexes four T1 channels and Ethernet link over a fiber optic link with various fiber interfaces: multimode, single-mode (up to 120 km), and single-mode over single fiber
- Automatic link backup with optional hot-swappable second main link
- Power redundancy with optional second wide-range power supply
- Management via ASCII terminal, dedicated Ethernet port, SNMP management station, or ConfiguRAD Web-based remote access terminal

The Optimux-4T1-Ethernet multiplexer combines up to four T1 channels and Ethernet link over a fiber optic link.

A pair of Optimux units provides a simple and low-cost solution for connectivity over distances of up to 120 km (74.5 miles).

For transmission reliability, an optional modular second link provides automatic backup upon link failure. An optional second power supply provides power redundancy for failsafe operation.

Each of the four T1 signals is transmitted independently, so that each T1 channel can be set to a different clock source.

RAD data communications
Innovative Access Solutions

Optimux-4T1-Ethernet
Four-Channel T1 and Ethernet Multiplexer

Various optical interfaces are available:

- 850 nm VCSEL (Vertical Cavity Surface Emitting Laser) for multimode fiber
- 1310 nm LED for multimode fiber
- 1310/1550 nm laser diode or long haul laser diode for extended range over single-mode fiber
- Single fiber (SF1, SF2 options) using a 1310 nm and 1550 nm laser diode transmitter with WDM technology, which enables the laser to transmit the signal at a different wavelength than the receive signal
- Single fiber (SF3 option) using SC/APC (Angled Polished Connector) technology, with a 1310 nm laser diode for single wavelength operation.

To facilitate system diagnostics, Optimux-4T1-Ethernet features LED status indicators, AIS alarm generation and recognition, and dry contact closure upon link failure.

Setup, control, and diagnostics are performed via a supervisory port using an ASCII terminal, an Ethernet connection to an SNMP management station, or a dedicated 10/100BaseT Ethernet port.

The units can be managed by:

- RADview-TDM running in a Windows or Unix environment
- ConfiguRAD Web-based remote access terminal.

The power supply is a wide-range AC/DC power supply that can be connected to either an AC power source (100 to 240 VAC), or to a DC power source (–48 VDC).

Optimux-4T1-Ethernet is a compact standalone unit. A rack mount adapter kit enables installation of one or two (side-by-side) units in a 19-inch rack.

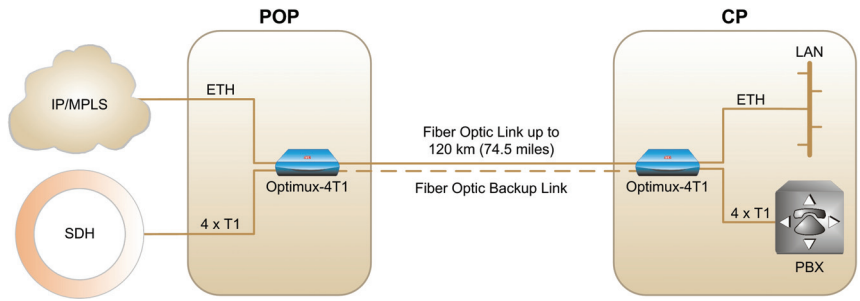

Figure 1. Ethernet and T1s Extension Over Fiber

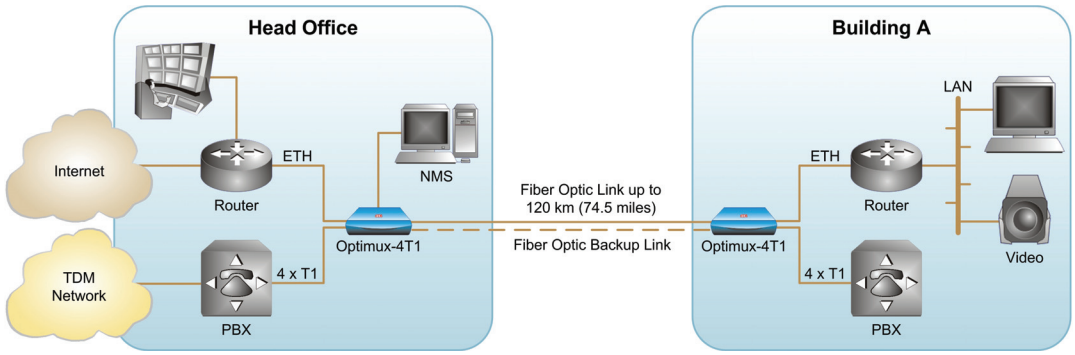

Figure 2. Ethernet, Voice, Data and Video Services Over Fiber

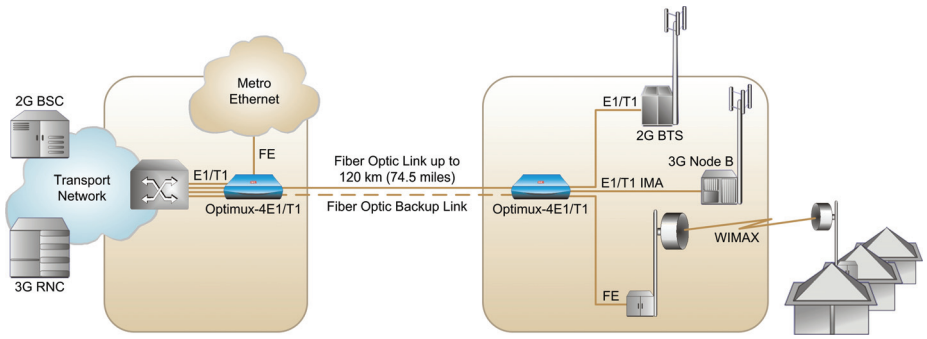

Figure 3. Cellular Backhaul Extension

SPECIFICATIONS

MAIN LINK

See *Table 1*

TRIBUTARY T1 CHANNELS

Number of Channels
4

Data Rate
1544 kbps

Line Code
B8ZS

Impedance
100Ω, balanced

Connectors
RJ-45, balanced

MNG–ETH and USER-ETH PORTS

Type
10/100BaseT

Connector
Shielded RJ-45

USER-ETH Port Throughput
75 Mbps

CONTROL PORT

Type
RS–232 DCE asynchronous

Data Rate
9.6, 19.2, 38.4, 57.6, 115.2 kbps

Connector
Mini-USB 5

ALARM PORT

Type
Dry relay contacts for major and minor alarms

Connector
RJ-45

GENERAL

Standards
G.703, G.824, G.955, IEEE 802.3

Front Panel Indicators
PWR
- On (green): both power supplies OK
- On (red): power supply A fault
- On (yellow): power supply B fault
- Off: power supply fault

LINK A/B
- On (red): Sync/Signal Loss on Link A/B
- (yellow): not used
- Off: normal operation

CH1 to CH4
- On (red): Signal Loss on channel
- On (yellow): AIS received on channel
- Off: normal operation

Rear Panel Indicators
Sig Link A/B (on the fiber optic module)
- On (green): signal exists on Link A/B
- Off: no signal on Link A/B

LINK/ACT
- On (yellow): link is up
- Off: link is down
- Blinks: frames are transmitted

100
- On (green): 100 Mbps mode
- Off: 10 Mbps mode

Power
Wide range: 100 to 240 VAC or –48 VDC (–40 to –72 VDC)

Power Consumption
AC: 25 VA max
DC: 9W max

Physical
Height: 4.37 cm (1.7 in)
Width: 21.7 cm (8.5 in)
Depth: 17.0 cm (6.7 in)
Weight: 0.5 kg (1.1 lb)

Environment
Temperature: 0°–50°C (32°–122°F)
Humidity: Up to 90%, non-condensing

Table 1. Fiber Optic Interface Characteristics

Wavelength	Fiber Type	Transmitter Type	Typical Power Output	Receiver Sensitivity	Typical Max. Range		Connector Type
[nm]	[µm]		[dBm]	[dBm]	[km]	[miles]	
850	62.5/125 multimode	Laser (VCSEL)	-7	-34	6	3.7	ST, SC, FC/PC
1310	9/125 single mode	Laser	-12	-34	47	29.2	ST, SC, FC/PC
1310	62.5/125 multimode	LED	-18	-32	7	4.3	ST, SC
1550	9/125 single mode	Laser	-12	-34	76	47.2	ST, SC, FC/PC
1310	9/125 single mode	Laser (long haul)	-2	-34	72	44.7	ST, SC, FC/PC
1550	9/125 single mode	Laser (long haul)	-2	-34	120	74.5	ST, SC, FC/PC
Tx: 1310 Rx 1550	9/125 single mode	Laser WDM (SF1)	-12	-34	47	29.2	SC
Tx: 1550 Rx 1310	9/125 single mode	Laser WDM (SF2)	-12	-34	47	29.2	SC
Tx/Rx: 1310	9/125 single mode	Laser (SF3)	-12	-27	20	12.4	SC/APC

Note: *The ranges specified above were calculated according to the following typical attenuation rates (with a 3 dB margin):*
- *3.5 dB/km for 850 nm multimode*
- *0.4 dB/km for 1310 nm single mode*
- *0.25 dB/km for 1550 nm single mode*

Data Sheet

Optimux-4T1-Ethernet

Four-Channel T1 and Ethernet Multiplexer

Ordering

OP-4T1-ETH/%/!/#/+/*

Legend

% R Second redundant power supply (default is one power supply only)

! ETH 10/100BaseT User Ethernet port

Main link interface connector type:
- **ST** ST type connector
- **FC** FC/PC type connector
- **SC** SC type connector

Note: *ST and FC connectors are not available for the single fiber options.*

+ Fiber optic link interface type:
- **85L** 850 nm, multimode, VCSEL
- **13** 1310 nm, multimode, LED

  Note: *Available with ST and SC connectors only*
- **13L** 1310 nm, single mode, laser diode
- **15L** 1550 nm, single mode, laser diode
- **13LH** 1310 nm, single mode, long-haul laser diode
- **15LH** 1550 nm, single mode, long-haul laser diode
- **SF1** Transmit 1310 nm laser (WDM), receive 1550 nm
- **SF2** Transmit 1550 nm laser (WDM), receive 1310 nm
- **SF3** Transmit and receive at 1310 m laser diode

* D Second redundant main link module (of same type as first main link module). Default is one main link module only.

Note: *For single fiber applications, a device with SF1 interface is always used opposite a device with SF2 interface, and vice versa. An SF3 interface works only opposite another SF3 interface.*

OP-4T1-M/#/+

Additional main link module (specify if the second main link module is different from the first main link module)

Note: *For ordering the Optimux-4T1 card version or coax uplink, please contact the Optimux Product Line Manager.*

SUPPLIED ACCESSORIES

AC power cord
DC adapter plug

CBL-MUSB-DB9F
Control port cable

CBL-RJ45-DB9/F
Alarm port cable

OPTIONAL ACCESSORIES

RM-33-2
Kit for mounting 1 or 2 units in a 19-inch rack

Table 2. Optimux Comparison Chart

Feature	Optimux-4E1/4T1	Optimux-34	Optimux-XLT1	Optimux-45/45L	Optimux-1551	Optimux-1553
Uplink	Fiber Optic	E3, Fiber Optic	Fiber Optic	T3, Fiber Optic	Copper, STM-1/OC-3	Copper, STM-1/OC-3
Bandwidth (Mbps)	108/106	34	25	45	155	155
Number of trunks	4 E1 4 T1	16 E1	16 T1	21 E1 28 T1	21/42/63 E1 28/56/84 T1	3 E3 3 T3
Ethernet support	✓	✓	✓	–	–	–
Special features	Redundant, hot-swappable uplinks	SFP-based uplinks	Modular	Ring support (Optimux-45)	Full redundancy	Full redundancy

International Headquarters
24 Raoul Wallenberg Street
Tel Aviv 69719, Israel
Tel. 972-3-6458181
Fax 972-3-6498250, 6474436
E-mail market@rad.com

North America Headquarters
900 Corporate Drive
Mahwah, NJ 07430, USA
Tel. 201-5291100
Toll free 1-800-4447234
Fax 201-5295777
E-mail market@radusa.com

www.rad.com

RAD data communications
Innovative Access Solutions

325-100-06/07 Specifications are subject to change without prior notice. © 1997–2007 RAD Data Communications Ltd. All other trademarks are the property of their respective holders.